AUTORIDAD DEL DISTRITO
DEL CENTRO DE CONVENCIONES
Estado Libre Asociado De Puerto Rico

P O Box 19269 San Juan PR 00910-1269
Teléfono (787) 722-3309 Fax (787) 722-3305

COMMONWEALTH OF PUERTO RICO
PUERTO RICO CONVENTION CENTER DISTRICT AUTHORITY

REQUEST FOR PROPOSALS

PART I – QUALIFICATION OF INTERESTED PARTIES

RFP # 174
Date: August 12, 2008

PROJECT TITLE:	**Puerto Rico Convention Center District**
CONTRACT ITEMS:	**Telecommunications Wireless Solutions**
STATEMENT OF QUALIFICATIONS DUE DATE:	**September 11, 2008**
ELIGIBILITY:	**Interested Parties may participate in Part I of this RFP by submitting a Statement of Qualifications. However, the Authority will only evaluate Statements of Qualifications from Interested Parties who are authorized to do business in the Commonwealth of Puerto Rico and who comply with other requirements for participation as set forth herein.**

Table of Contents

Contents

1. INTRODUCTION 2
   1.1 SCOPE OF WORK 2
   1.2 DEFINITIONS 3
   1.3 RFP PROCESS – GENERAL OVERVIEW 4
   1.4 EVALUATION OF STATEMENTS OF QUALIFICATIONS 5
2. GENERAL INFORMATION FOR INTERESTED PARTIES 5
   2.1 RFP COORDINATOR 5
   2.2 WEB SITE ADDRESS 6
   2.3 ESTIMATED SCHEDULE OF PROCUREMENT ACTIVITIES 6
   2.4 GENERAL SESSION 6
   2.5 REVISIONS TO THE RFP 7
   2.6 DUE DILIGENCE 7
   2.7 NO OBLIGATION TO CONTRACT 7
   2.8 FULL ACCEPTANCE OF TERMS AND CONDITIONS 7
3. RFP - PART I: QUALIFICATION OF INTERESTED PARTIES 7
   3.1 REQUIRED DOCUMENTS FOR PARTICIPATION IN RFP - PART I 7
   3.2 EVALUATION OF STATEMENTS OF QUALIFICATIONS 9
   3.3 NOTIFICATION 9
4. PROTESTS AND RECONSIDERATION 9
   4.1 REQUEST FOR RECONSIDERATION 9
EXHIBITS 11

1. INTRODUCTION

The Puerto Rico Convention Center District Authority (henceforth, the "AUTHORITY") was created by Law No. 351 of September 2, 2000, as amended, as a public corporation responsible for developing and operating the Puerto Rico Convention Center District (henceforth, “District”).

This first part of the RFP (henceforth, "RFP–Part I") is being issued to evaluate Interested Parties’ qualifications to provide the Contract Items, described in Article 1.1 and in Exhibit A hereof. Qualified Parties may be invited to submit proposals in a potential second part of the RFP (henceforth, “RFP-Part II”).

Interested Parties may participate in RFP–Part I by submitting a Statement of Qualifications which shall be in conformance with the terms, requirements and conditions set forth herein.

By accepting Statements of Qualifications from Interested Parties, the AUTHORITY does not commit itself to: (i) the ultimate award of a contract for the provision of the Contract Items, and/or (ii) pay any costs or expenses, direct or indirect, incurred by the Interested Parties in the preparation of the Statement of Qualifications and/or in the participation in RFP-Part I.

Pursuant to the public policy of the Commonwealth of Puerto Rico (henceforth, the "Commonwealth"), the AUTHORITY encourages local suppliers of products and services to participate in RFP–Part I. Participation may be either on a direct basis in response to the RFP or on a subcontractor basis.

1.1 SCOPE OF WORK

The Interested Parties should be able to provide the Contract Items, which consist of the following:

<u>Neutral-Host Distributed Antenna Systems (henceforth, “NH-DAS")</u>

The Selected Proponent shall design, procure, install, configure, commission, operate and maintain a NH-DAS within the District at its own cost and responsibility. The Selected Proponent shall also be responsible for all licenses, endorsements and permits required to render its services. The NH-DAS will offer the capability of integrating the coverage of all of the Cellular/PCS Service Providers and improve their service within the District. Revenues to the Selected Proponent will derive from lease agreements entered into with Cellular/PCS Service Providers, which shall be pursued and secured by the Selected Proponent. The Selected Proponent will also enter into a contract with the AUTHORITY and pay the AUTHORITY rent for using the AUTHORITY’s premises to offer its services.

The Selected Proponent must abide by certain design parameters and other performance requirements to be discussed during RFP–Part II. Some of the aforementioned parameters and requirements are depicted on Exhibit A hereof.

<u>WiFi Network</u>

The Selected Proponent shall design, procure, install, configure, commission, operate and maintain a WiFi Network within the District at its own cost and responsibility. The Selected Proponent is responsible for all licenses, endorsements and permits required to render its services. Revenues to the Selected Proponent will be derived from a lease agreement

entered into with the AUTHORITY, in which the AUTHORITY will pay the Selected Proponent for its services.

The Selected Proponent must abide by certain design parameters and other performance requirements to be discussed during RFP–Part II. Some of the aforementioned parameters and requirements are described in Exhibit A hereof.

The Selected Proponent and the AUTHORITY will use their best effort to integrate the NH-DAS with the WiFi Network to maximize cost and operational efficiency.

Please refer to Exhibit A for more detailed information regarding the Contract Items.

1.2 DEFINITIONS

1. **Active Commercial Relations** – Refers to current business and contractual relations with a Cellular/PCS Service Provider. Interested Party must be able to show written proof of said current business and contractual relationship through a certification letter from a high ranking officer of the Cellular/PCS Service Provider as required in Article 3.1(3) hereof.

2. **Applicable Law** – Means any law, statute, ordinance, code, rule or regulation, federal or local, as well as any order, writ, injunction, decree, ruling, determination, award, permit or variance of any federal or local governmental body, in effect now or as it may become applicable in the future, or any binding agreement with any federal or local governmental body, including technical standards, codes and specifications.

3. **AUTHORITY** – The Puerto Rico Convention Center District Authority.

4. **Cellular/PCS Service Providers** – Wireless and personal telephone service providers with operation in licensed frequency bands authorized to do business within the Commonwealth and who are duly certified by the Telecommunications Regulatory Board of Puerto Rico.

5. **Commonwealth** – The Commonwealth of Puerto Rico.

6. **Contract** – The written and fully executed agreement between the AUTHORITY and the Selected Proponent which may potentially result from this RFP process.

7. **Contract Items** – The design, installation, maintenance and/or management of the Telecommunications Wireless Solutions as specified, in general, in Article 1.1 and Exhibit A hereof.

8. **DAS** – Refers to a Distributed Antenna System, which is a Distributed Antenna System that supports the operation of multiple service providers, all of which share a single integrated infrastructure. A Distributed Antenna System is a system comprised of multiple antennas distributed throughout an area, all of which are connected to a centralized unit for control purposes. This centralized unit receives a signal from either a bi-directional amplifier (commonly referred to as a “repeater”) or a base transceiver station from a single service provider. A Distributed Antenna System is

9. **District** – Puerto Rico Convention Center District.

10. **Evaluation Committee** – Group of individuals designated by the AUTHORITY to evaluate the Statements of Qualifications of the Interested Parties.

11. **GSA** – The General Services Administration of the Commonwealth.

12. **Interested Parties** – The individuals, corporations, companies, partnerships or other legal entities authorized to do business in Puerto Rico which submit a Statement of Qualifications pursuant to this RFP-Part I.

13. **NH (Neutral-Host)** – For the purpose of this document, a company that is dedicated to the construction, operation and maintenance of telecommunications facilities for the purpose of leasing the use of these to telecommunications service providers in a multi-tenant environment. These facilities include telecommunications towers, monopoles and DAS.

14. **NH-DAS** – A DAS that supports the operation of multiple service providers, all of which share a single integrated infrastructure.

15. **Qualified Party** – Refers to the Interested Party who, based on the analysis performed by the AUTHORITY is considered to meet the qualification criteria.

16. **Request for Proposals ("RFP")** – The procurement process by which the AUTHORITY desires to obtain the delivery of the Contract Items.

17. **Selected Proponent** – Refers to the Qualified Party who, the AUTHORITY, based on the proposals during RFP-Part II, selected to enter into negotiations to enter into the Contract.

18. **Statement of Qualifications** – The documents and information submitted by Interested Parties as further described in Article 3.

19. **Statement of Qualifications Due Date** – Date upon which the AUTHORITY shall receive the Statements of Qualifications from the Interested Parties.

20. **WiFi Network** – is a wireless network based on the IEEE 802.11 group of standards.

1.3 RFP PROCESS – GENERAL OVERVIEW

This RFP may consist of two parts. Through the first part of the process, RFP–Part I, the AUTHORITY intends to qualify Interested Parties who submit Statements of Qualifications based on the evaluation criteria set forth herein. The AUTHORITY may undertake a second part of the process, RFP–Part II, if the AUTHORITY deems it desirable and convenient for the public interest.

A. <u>RFP-Part I: Statement of Qualifications</u>

Interested Parties may participate in RFP-Part I by submitting a Statement of Qualifications which shall include all documents and information described in Article 3 hereof. The Evaluation Committee will evaluate Statements of Qualifications to assess their compliance with criteria established in Exhibit B hereof.

The Evaluation Committee reserves the right to contact Interested Parties during the evaluation period, in order to obtain additional information or to make clarifications regarding any information contained in the Statements of Qualifications.

The Evaluation Committee will identify and recommend to the AUTHORITY's Executive Director the individuals and/or entities meeting the qualification criteria (the "Qualified Parties"). The AUTHORITY may invite Qualified Parties to participate in RFP-Part II, provided the AUTHORITY deems it desirable and convenient for the public interest.

B. RFP – Part II: Evaluation of Proposals

The purpose of RFP-Part II, if undertaken by the AUTHORITY, shall be to evaluate the Qualified Party's telecommunications wireless solutions based on technical specifications and other criteria set forth therein.

1.4 EVALUATION OF STATEMENTS OF QUALIFICATIONS

The AUTHORITY will designate the Evaluation Committee to assess compliance and suitability of the Statements of Qualifications with the provisions of the RFP and the AUTHORITY's needs. Statements of Qualifications that do not meet the requirements set forth in RFP-Part I may be rejected. In the event that a Statement of Qualifications is rejected, the AUTHORITY will notify in writing to the Interested Party the basis for such decision.

In the evaluation of the Statements of Qualifications, the AUTHORITY may consider all information contained therein and any other information obtained by the AUTHORITY. In furtherance of the evaluation of the Statements of Qualifications, the AUTHORITY and its advisors may conduct additional research it may deem necessary to make a better assessment of the Interested Party's credentials.

Upon evaluation of the Statements of Qualifications, the AUTHORITY will determine whether, in order to facilitate the designation or ranking of Qualified Parties, these will be required to appear before the Evaluation Committee for interviews. Interested Parties selected to appear for an interview will be notified in writing, by mail, facsimile transmission or otherwise, of the time, place, duration and format of the interview.

2. GENERAL INFORMATION FOR INTERESTED PARTIES

2.1 RFP COORDINATOR

The RFP Coordinator is the sole point of contact in the AUTHORITY for this process. All communications between the Interested Party and the AUTHORITY upon receipt of this RFP-Part I shall be made through written letters sent via regular mail, facsimile, and/or electronic mail (henceforth, "e-mail") to the RFP Coordinator, as follows:

Name:	Mr. Alexander Rodríguez
Title:	Chief Information Officer
Address:	P.O. Box 19269
City, State, Zip Code:	San Juan, PR 00910-1269
Phone Number:	787-722-3309
Fax Number:	787-722-3305
E-Mail Address:	**RFPInfo172@prcda.com** (The system will generate an instant message confirming that the e-mail was received. If the Interested Party does not receive the receipt message, the Interested Party must re-send its message until such receipt is received).

Any other form of communication will be considered unofficial and non-binding on the AUTHORITY. The Interested Party is to rely on written statements issued by the RFP Coordinator. Communications directed to any party other than the RFP Coordinator may result in disqualification of the Interested Party.

2.2 WEB SITE ADDRESS

All RFP documents, its addenda, deadlines and all other related information will be posted in the AUTHORITY's web site, at the following address:

www.prconventiondistrict.com

It will be the responsibility of the Interested Parties to periodically access the web site above to maintain themselves informed of the RFP process.

2.3 ESTIMATED SCHEDULE OF PROCUREMENT ACTIVITIES

The estimated schedule of activities is shown in Exhibit C. The AUTHORITY reserves the right to revise this schedule from time to time as it deems necessary. In such a case, the AUTHORITY will inform the Interested Parties via regular mail, facsimile, and/or e-mail. Failure to receive a written notice shall not exempt the Interested Party from complying with changes to the schedule. The Interested Party shall therefore undertake necessary steps to remain informed of events related to the RFP and is advised to access regularly the AUTHORITY's web site.

2.4 GENERAL SESSION

The AUTHORITY may conduct one or several general sessions prior to the Statement of Qualifications Due Date. General Sessions are meant to provide an overview of the process. The AUTHORITY strongly recommends that Interested Parties attend General Session(s).

Written questions may be submitted in advance to the RFP Coordinator. The AUTHORITY will make available to Interested Parties the questions and answers discussed during General Session(s) within the timeframe stated in Exhibit C. In order to establish a common ground for Statements of Qualifications, since General

Session(s) are not mandatory, the AUTHORITY shall be bound only by written answers to questions. Oral responses given at General Session(s) which do not become part of written addenda shall be considered unofficial and shall not bind the AUTHORITY in any manner whatsoever.

2.5 REVISIONS TO THE RFP

The AUTHORITY may issue addenda in the event it is necessary to revise any part of this RFP-Part I. Additionally, published questions and answers from General Session(s) and any other pertinent information shall be provided as addenda to this RFP-Part I.

The AUTHORITY reserves the right to cancel or to reissue this RFP-Part I, in whole or in part, at any time.

All addenda will be made available to Interested Parties who register to receive a copy of this RFP-Part I as per the AUTHORITY's log.

2.6 DUE DILIGENCE

Prior to submitting the Statement of Qualifications, the Interested Party shall make all the investigations and examinations necessary to ascertain the conditions and requirements affecting the provision of the Contract Items.

2.7 NO OBLIGATION TO CONTRACT

This RFP-Part I does not obligate the Commonwealth or the AUTHORITY to undertake the RFP-Part II or to execute the Contract.

2.8 FULL ACCEPTANCE OF TERMS AND CONDITIONS

By submitting a Statement of Qualifications in response to this RFP-Part I, Interested Parties agree to follow and abide by the procedures, terms, conditions and instructions set forth herein.

3. RFP - PART I: QUALIFICATION OF INTERESTED PARTIES

3.1 REQUIRED DOCUMENTS FOR PARTICIPATION IN RFP - PART I

In order to participate in this qualification part of the RFP process, RFP–Part I, Interested Parties shall submit a Statement of Qualifications containing the information and documents described below:

1. Executive Summary: Interested Parties must present an Executive Summary that shall include: (i) a description of legal status (sole proprietorship, partnership, corporation, etc.); (ii) the year the Interested Party was organized to do business under its current legal status; (iii) the Federal Employer Tax Identification number or Social Security number; (iv) an organization chart of the company; (v) Interested Party's experience in similar projects; (v) the resume of the members of its management and professional team and (vi) the designated primary contact person. The Interested Party must provide evidence that it is authorized to do business in the Commonwealth and that

it currently is in Good Standing, and that it has had active business operations for at least three (3) consecutive years prior to submitting the Statement of Qualifications.

If the Interested Party expects to subcontract any of the work to deliver the Contract Items, a complete company profile of such proposed subcontractor(s) together with references, as discussed above, must also be supplied.

2. Project Experience: Interested Parties must describe their experience with similar projects and provide verifiable contact information including names, e-mails and telephones of the contacts. Interested Parties **must have had or currently have at least one (1) facility in Puerto Rico that complies with the NH-DAS term as defined herein**. Interested Parties must provide the information requested in Exhibit D for each NH-DAS that it has managed and maintained in Puerto Rico.

The Interested Parties must be certified by the manufacturer of the active equipment vendor to be utilized for the NH-DAS. Copy of the company's certification must be provided and must include: (i) date of original certification and subsequent renovations; (ii) period of certification; and (iii) the signature of a duly authorized individual of the equipment manufacturer company.

3. Evidence of Active Commercial Relations: The Interested Parties must demonstrate that they currently have effective contractual relations with, at least, two Cellular/PCS Service Providers, relating to telecommunications services similar to those procured in this RFP. The Interested Parties must provide a letter from each Cellular/PCS Service Provider with whom it currently has Active Commercial Relations. The Cellular/PCS Service Provider must certify in the letter the existence of the Active Commercial Relations, the extension and the nature thereof. The letter must be signed by a high ranking officer of the Cellular/PCS Service Provider, preferably by the Chief Engineering Officer or its equivalent.

4. Audited Financial Statements: Interested Parties must provide audited financial statements for the last two (2) fiscal years. The financial statements must be prepared by a Certified Public Accountant.

5. Additional Offerings: Interested Parties may include any additional information that it may deem appropriate in order to assist the Evaluation Committee in assessing the Interested Parties' credentials.

The AUTHORITY will evaluate the Statement of Qualifications based on the criteria set forth in Exhibit C hereof. However, the AUTHORITY reserves the right to request additional information and establish additional criteria in order to make further determinations about Interested Parties' credentials.

Interested Parties must provide within its Statement of Qualifications a written Authorization to the AUTHORITY to request from any person, firm or corporation to disclose or furnish any information in verification of the recitals comprised in the Statement of Qualifications.

<u>Certificate of Eligibility – Exclusive Registry of Bidders</u>

Although it is not necessary for participating in the RFP, the Interested Party may choose to present within its Statement of Qualifications a valid and effective certification issued by the GSA evidencing the Interested Party's registration in the *Exclusive Registry of Bidders*[1] (henceforth, the "Registry") and its eligibility to contract with the Government. Full registration in the Registry shall not signify that the Interested Party complies with other qualifications and requirements described in the RFP which shall be submitted pursuant to the terms and conditions described herein.

For the benefit of the Interested Parties, Exhibit E includes a copy of the Application for Bidders Registry and related documents. Notwithstanding the documents provided, the responsibility for filing complete and correct documents and for complying with all the requirements established by the GSA rests entirely with the Interested Party. For more information regarding registration requirements, the Interested Party may contact the GSA directly at: (787) 759-7676 Ext. 2377.

3.2 EVALUATION OF STATEMENTS OF QUALIFICATIONS

The Evaluation Committee will evaluate the Statements of Qualifications submitted by the Interested Parties based on the evaluation criteria set forth in Exhibit B of the RFP. Interested Parties who timely submit their respective Statements of Qualifications and are determined by the AUTHORITY to adequately meet the evaluation criteria shall be designated as Qualified Parties. The AUTHORITY may invite all Qualified Parties to participate in a second part of this RFP process, RFP-Part II.

3.3 NOTIFICATION

The AUTHORITY will notify to the Interested Parties, via certified mail, their compliance or lack thereof with the evaluation criteria set forth in Exhibit B. The AUTHORITY may also invite thereby all Qualified Parties to participate in RFP-Part II.

4. PROTESTS AND RECONSIDERATION

4.1 REQUEST FOR RECONSIDERATION

Any Interested Party adversely affected by a decision made by the AUTHORITY in connection with the qualification procedure provided in this RFP-Part I may submit a request for reconsideration to the Executive Director of the AUTHORITY in accordance with the *Uniform Administrative Procedure Act*, Law No. 170 of August 12, 1988, as amended, and the AUTHORITY's regulations. A request for reconsideration, as well as any other protest, shall be in writing, and shall identify the name and address of the requesting party, shall contain a detailed and accurate statement of the grounds for the request, including copies of relevant documents, and shall specify the relief requested.

Protests based on alleged restrictive specifications, violations of law or regulations, or other alleged improprieties in the solicitation process which are apparent prior to the Statement of Qualifications Due Date shall be submitted no later than five (5) working days after these occurrences became or should have been apparent to the Interested Party submitting the

[1] For additional information regarding the Exclusive Register of Bidder, Proponent may visit http://www.asg.gobierno.pr.

protest. A request for reconsideration shall not stay the further action of the AUTHORITY relating to the RFP process.

A request for reconsideration or other protest that fails to comply with the time limits or procedures stated above or otherwise provided in Applicable Laws may be dismissed or denied without further consideration.

EXHIBITS

Exhibit A	Contract Items
Exhibit B	Evaluation Criteria
Exhibit C	Procurement Schedule
Exhibit D	Project Experience
Exhibit E	Application for Bidders Registry and Related Documents

Exhibit A
CONTRACT ITEMS

CENTRO DE CONVENCIONES DE PUERTO RICO

RFP # 174: Telecommunications Wireless Solutions

EXHIBIT A
CONTRACT ITEMS/
TECHNICAL SPECIFICATIONS

August 12, 2008

Developed by Noel Colón-Morera, RCDD/NTS
ncolon@commainc.com

100 Convention Boulevard
San Juan, Puerto Rico 00907

URL: www.prconvention.com

TABLE OF CONTENTS

Contents

1. Executive Summary 3
2. Definitions and Acronyms 3
3 RFP Process and Timetable 6
4. Project Overview and Concept 6
6. Operational Requirements 7
7. NH-DAS System Technical Requirements 7
7.1 General 7
7.2 Head-End 8
7.3 Remote Cabinets 9
7.4 Antenna Locations 9
7.5 Structured Cabling 10
7.5.1 Backbone Cabling 10
7.5.2 Horizontal Cabling 10
7.5.3 Cable Pathways 10
7.6 Industry Support 10
7.7 Management Software 11
8. WPN Technical Requirements 11
8.1 Network Environment 11
8.2 Service Areas 12
8.3 Active Devices 12
8.3.1 Access Points 12
8.3.2 Controller 12
8.3.3 PoE Source 12
8.4 Passive Components 12
8.4.1 Copper Media and Connectivity 12
8.4.2 Cable Pathways 13
8.4.3 Grounding and Bonding 13
8.4.4 Administration 13
8.4.4.1 Network Administration 13
8.4.4.2 Infrastructure Identification 13
8.5 Required Documentation 13
9. System Design 13
10. Implementation Requirements 15

1. Executive Summary

The Convention Center District Authority (CCDA) wants to implement a wireless telecommunications system (WTS) within the Puerto Rico Conventions Center (hereon "the Property") with the following objectives:

- Improve the signal coverage of wireless telecommunications service providers such as Cellular/PCS carriers
- Implement wireless Internet service access
- Make wireless telecommunications services available to its tenants, customers and internal personnel
- Integrate all wireless telecommunications systems.
- Appoint a single company as the wireless telecommunications infrastructure provider and administrator.

The WTS shall be designed, installed, configured, commissioned, operated and maintained by a single company to be appointed by the CCDA.

The purpose of this Request for Proposal (RFP) document is to provide CCDA's requirements for the implementation of the WTS. The CCDA will engage in the evaluation of proposals for the proper implementation and operation of the system.

Details required for the proper development of a Business Proposal towards the CCDA are included on this document. Compliance with these requirements shall be considered mandatory. The selected company will be required to perform a formal system design in accordance to the mandatory requirements specified in this document. It shall be noted that this design and engineering work is to be performed ONLY by the selected vendor once a contract with the CCDA has been finalized. CCDA will approve final design before its implementation.

2. Definitions and Acronyms

This section defines some technical terms that are utilized throughout the document.

Active DAS – A DAS that is based on active components.

AL – Antenna Location

AWS - For the purpose of this document, operation within the 1700-1800 MHz frequency band.

BDA – Bi-Directional Amplifier commonly referred to as a "repeater".

BICSI – A telecommunications association, formerly known as Building Industry Consulting Service International.

BTS – Base Transceiver Station.

Cable Pathways – The vertical and horizontal route of the telecommunications cables.

Carriers – For the purpose of this document, wireless telecommunications service providers with operation in licensed frequency bands.

Cellular – For the purpose of this document, operation within the licensed 850MHz frequency band.

CMP Cable – Copper Media Plenum-rated – copper based cable suitable for installation in plenum areas.

Cellular/PCS Service Providers – Wireless and personal telephone service providers with operation in licensed frequency bands authorized to do business within the Commonwealth and who are duly certified by the Telecommunications Regulatory Board of Puerto Rico.

DAS (Distributed Antenna System) – A system comprised of multiple antennas distributed throughout an area, all of which are connected to a centralized unit for control purposes. This centralized unit receives a signal from either a BDA or a BTS from a single service provider. A DAS is typically deployed indoors with the objective of improving the signal coverage of a particular service within the property where it is installed. Outdoor DAS systems have been deployed in campus environments where large geographical areas are to be serviced.

EIA (Electronics Industries Alliance) – The alliance is organized along specific electronic product and market lines, and, as a standards association, develops and publishes industry guidelines.

EIRP – Equivalent (Effective) isotropically (isotropic) Radiated Power

Entrance Facility (EF) – An entrance to a building for both public and private network service cables including the entrance point at the building wall and continuing to the entrance room or space.

FCC – Federal Communications Commission

ISM – Industrial Scientific and Medical unlicensed frequency band with operation in the 2.4GHz frequency spectrum as defined by the FCC.

ISP – Internet Service Provider

MM – Multimode

MN – Main Node

NEC (National Electrical Code) – A safety code written and administered by the National Fire Protection Association (NFPA)

NH (Neutral-Host) – For the purpose of this document, a company that is dedicated to the construction, operation and maintenance of telecommunications facilities for the purpose of leasing the use of these to telecommunications service providers in a multi-tenant environment. These facilities include telecommunications towers, monopoles and DAS.

NH-DAS – A DAS that supports the operation of multiple service providers, all of which share a single integrated infrastructure.

NOC (Network Operations Center) - One or more locations from which control is exercised over a computer, television broadcast, or telecommunications network. For the purpose of this document, the control shall be exercised over the WTS. The NOC is responsible for monitoring the WTS for alarms or certain conditions that may require special attention to avoid impact on the networks performance. If necessary, NOCs escalate problems to the appropriate personnel. For severe conditions that are impossible to anticipate – such as a power failure or optical fiber cable cut – NOCs have procedures in place to immediately contact technicians to remedy the problem.

OFNP Cable – Optical Fiber Non-conductive Plenum-rated – fiber optic cable suitable for installation in plenum areas.

PCS – For the purpose of this document, operation within the licensed 1900MHz frequency band.

Plenum – A designated area used for transport of environmental air as part of the air distribution system of a building. Because it is part of the air distribution system, cables installed in this space require a higher fire rating.

PMI – Project Management Institute

RC – Remote Cabinet

RCDD (Registered Communications Distribution Designer) – A designer certified by BICSI and accepted by the industry as a professional with the required expertise in the application of codes and standards pertaining to telecommunications distribution systems.

RCDD/WD (RCDD/Wireless Design Specialist) – A designer certified by BICSI and accepted by the industry as a professional with the required expertise in the application of codes and standards pertaining to wireless telecommunications distribution systems.

RIU – Radio Interface Unit

RN – Remote Node

RRH – Remote Radio Head

RSSi – Received Signal Strength Indicator

Selected Proponent – Refers to the Qualified Party who, the Authority, based on the proposals during RFP-Part II, selected to enter into negotiations to enter into the Contract.

SM – Single mode

TC – Telecommunications Cabinet

TIA (Telecommunications Industry Association) – A standards association that publishes telecommunications standards and other documents.

TPMA – Telecommunications Project Management Association

TR (Telecommunications Room) – An enclosed space for housing telecommunications equipment, cable terminations, and cross-connects. The TR is the recognized cross-connect between the backbone cable and the horizontal cabling.

UPS – Uninterruptible Power System

WiMAX Forum - The WiMAX Forum® is an industry-led, not-for-profit organization formed to certify and promote the compatibility and interoperability of broadband wireless products based upon the harmonized IEEE 802.16/ETSI HiperMAN standard. A WiMAX Forum goal is to accelerate the introduction of these systems into the marketplace. WiMAX Forum Certified™ products are fully interoperable and support broadband fixed, portable and mobile services. Along these lines, the WiMAX Forum works closely with service providers and regulators to ensure that WiMAX Forum Certified systems meet customer and government requirements.

WiMAX Forum Certified RF Network Engineer (WFRE) – A wireless system designer certified by the WiMAX Forum and recognized by the industry as a professional with the required expertise in the application of engineering and radio frequency (RF) concepts for wireless telecommunications systems.

WCS - For the purpose of this document, operation within the 2300 MHz frequency band.

WPN (Wireless Private Network) – For the purpose of this document, a wireless network based on the IEEE 802.11 group of standards.

WTS (Wireless Telecommunications System) – The system to be implemented as part of this project, comprised of the NH-DAS and the WPN.

WTS Operator – The Selected Proponent that will operate the system.

3 RFP Process and Timetable

See Main RFP document.

4. Project Overview and Concept

The WTS will consist in the integration of a NH-DAS and WPN. The NH-DAS will offer the capability of integrating the coverage of all of the Cellular/PCS service providers with presence in Puerto Rico and improve their service within the Property. The WPN will provide wireless Internet access throughout the property.

The WTS will be designed, installed, configured, commissioned, operated and maintained by a WTS Operator. The WTS Operator will lease the use of the system to Cellular/PCS and Internet service providers.

The capital and operational investment required for the design, implementation, operation and maintenance of the WTS will be incurred by the WTS Operator.

6. Operational Requirements

The Proponent must comply with the following operational requirements:

i. Sub-tenants:

   The WTS Operator will be completely responsible of the relationship with the service providers to which the WTS's usage will be leased. These service providers include, but are not limited to:

   a. Carriers – the list includes, but is not limited to AT&T Mobility, Centennial, Claro, Open Mobile, Sprint, Suncom (T-Mobile)
   b. ISP – initially, there will be a single sub-tenant providing such service. This company shall be appointed by the CCDA; however, the contractual terms between the WTS Operator and the ISP shall be determined by the two parties, not by the CCDA.

ii. The company must have an established NOC in operation with remote access to its NH-DAS facilities.

iii. The WTS must be integrated to the company's NOC.

iv. The NOC shall have the capability of monitoring each NH-DAS facility in real time.

v. The company must have an established support structure and methodology for an operation 24 hours per day, 365 days per year.

vi. The company's support staff must include the following personnel:

   a. RF engineer
   b. Project Manager
   c. Certified Technicians
   d. Certified Contractors

7. NH-DAS System Technical Requirements

The proposed NH-DAS system must comply with the following technical requirements:

7.1 General

i. The system must be an active NH-DAS.
ii. The overall system concept will be based on the following diagram:

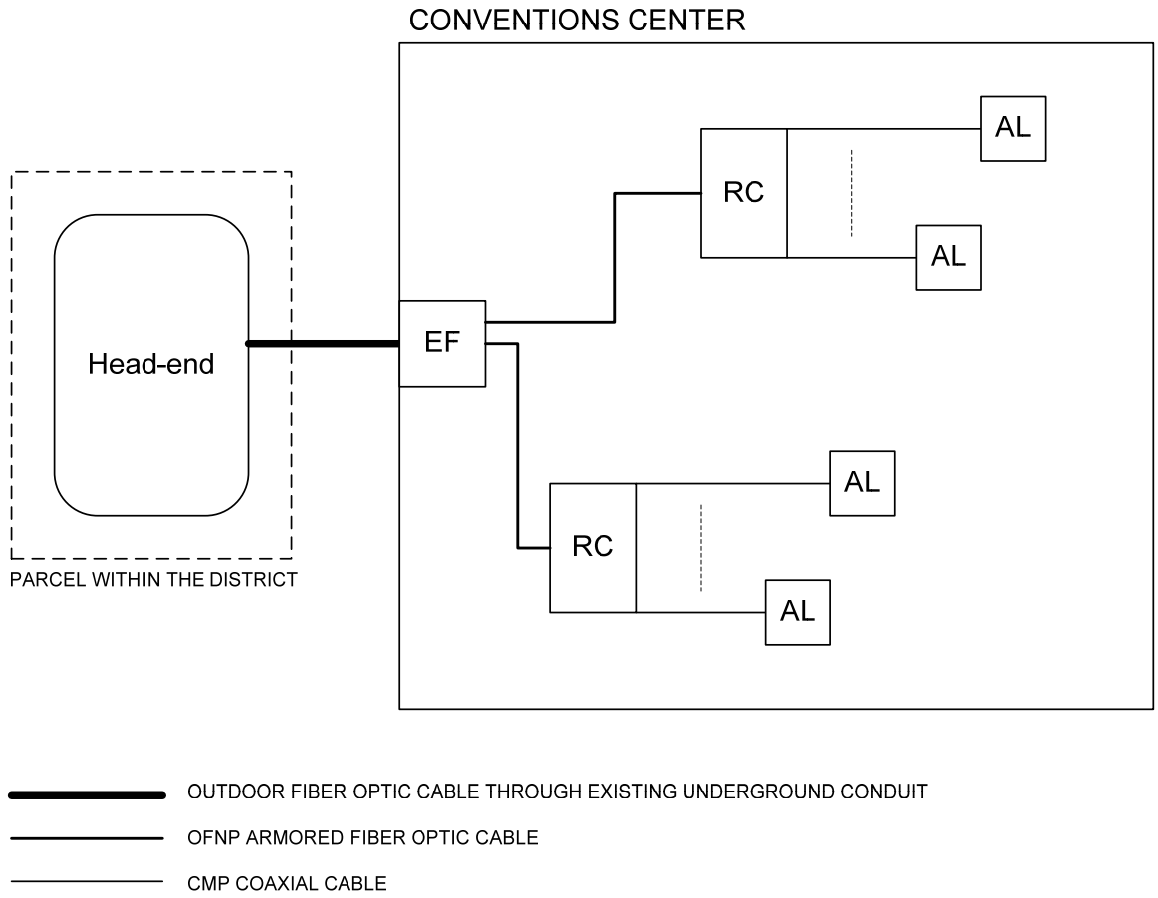

7.2 Head-End

The Head-end will be the location where the NH-DAS' main equipment will reside. Equipment from the service providers will reside in this location as well.

The Head-end will be located in a parcel within the district that falls outside of the Conventions Center. The WTS Operator must build the Head-end, in accordance with CCDA's approved design.

The equipment of the service providers and the NH-DAS will interconnect through a Radio Interface Unit (RIU) that will reside in the main equipment cabinet of the NH-DAS. The RIU must comply with the following requirements:

i. Combine/split the signals of all the service providers and inject the composite signal to the system's Main Node.

ii. Provide for the addition of future services to be integrated to the system.

The Main Node (MN) will reside in the main equipment cabinet of the NH-DAS. The MN must comply with the following requirements:

i. Serve as the RF-to-optical signal converter
ii. Independently manage the power of each frequency band

The head-end must have its dedicated electrical power facilities all under the name of the WTS Operator.

There are existing conduits connecting the parcel of the Head-end with the Conventions Center's EF.

7.3 Remote Cabinets

Remote Cabinets (RC) will be located in multiple locations within the Property. These must be located in existing TRs. The RCs shall comply with the following requirements:

i. Wall-mounted
ii. Minimum of 36" in height to allow for future system growth
iii. Integrated fan assemblies

The electricity for the RCs will be provided by the CCDA at each TR. Proponent will provide environmental requirements for these TRs.

The RCs will house the following NH-DAS equipment:

i. Remote node – will serve as the Optic-to-RF signal converter
ii. UPS
iii. Fiber optic patch panels

RCs will be interconnected to the Head-end through fiber optic cable to be constructed by company, passing through the EF.

7.4 Antenna Locations

Antenna Locations (AL) must comply with the following requirements:

i. For omni-directional antennas
    a. secured, ceiling-mounted enclosure with minimum dimensions of 24"(width) x 24"(length) x 3"(depth)
    b. house 1 wireless access point (AP) and 1 Remote Radio Heads (RRH)
    c. door must provide knock-outs to install up to three antennas
    d. coaxial jumpers from the AP and RRH to the antenna must be kept inside the enclosure

ii. For directional antennas
    a. secured, ceiling-mounted enclosure with minimum dimensions of 24"(width) x 24"(length) x 6"(depth)
    b. house 1 wireless access point (AP) and 1 Remote Radio Heads (RRH)
    c. coaxial jumpers from the AP and RRH to the antenna must install through conduit or raceway.

The RRHs shall comply with the following requirements:

i. Powered from the remote node – no local power shall be provided at any AL
ii. Composite power output range of 20-30dBm for Cellular/PCS frequency bands. The maximum composite EiRP for each AL must be 36dBm in compliance with FCC's 47 CFR Part 15.

The antennas shall comply with the following requirements:

i. Operate in the 850MHz (cellular), 1900MHz (PCS) and 2400MHz (ISM) frequency bands, either simultaneously or utilizing a maximum of 2 separate antennas. Antennas shall also operate in these frequency bands as they become available: 700MHz spectrum, 1700-1800MHz (AWS) and 2300MHz (WCS).
ii. Omni-directional antennas' gain must not exceed 3dBi for each frequency band
iii. Directional antenna's gain must not exceed 11dBi for each frequency band
iv. Antenna specifications must be submitted as part of the proposal.

CCDA reserves the right to approve the utilization of the proposed antenna due to the esthetic impact it might have within the Property.

7.5 Structured Cabling

The following requirements apply to every cable to be installed as part of the WTS implementation.

7.5.1 Backbone Cabling

The backbone cabling media to interconnect the Head-end and the RCs must be fiber optic. The fiber optic type (SM or MM) and the quantity of fiber optic strands in the cable(s) must be determined by the WTS Operator based on the system initial and future capacity requirements. The fiber optic backbone cable must comply with the following requirements:

i. Head-end to EF segment – Outdoor armored fiber optic cable
ii. EF from RCs segments – OFNP armored fiber optic cable

7.5.2 Horizontal Cabling

The horizontal cabling media to interconnect the RCs and the ALs must be coaxial cable. The coaxial type (50Ω or 75Ω) and the quantity of cable drops must be determined by the WTS Operator based on the system initial and future capacity requirements. The coaxial horizontal cable must comply with the following requirements:

i. Maximum overall diameter over jacket of 0.35" in order to minimize the pathways' disruption and extend its utilization capacity
ii. CMP or CATVP

7.5.3 Cable Pathways

Cables shall be supported throughout each route in its entirety. Acceptable cable support types are:

- Plenums – J-hooks, cable trays, cable ladders
- Exposed areas – EMT conduit
- TRs – cable trays, EMT conduit

Existing cable ladders can be utilized where available.

7.6 Industry Support

The NH-DAS must comply with the following industry requirements:

i. Support initial operation of services in the 850MHz and 1900MHz frequency bands
ii. Support current protocols such as GSM, GPRS, UMTS, CDMA, EV-DO

The WTS Operator must commit to furnish or upgrade the NH-DAS as required in order to comply with service providers' future operational requirements. These could include the operation in the 2.5GHz, 1.7-1.8GHz (AWS) and 700MHz frequency bands and the utilization of protocols such as WiMAX and LTE.

7.7 Management Software

The NH-DAS must have a management software platform that complies with the following requirements:

i. SNMP enabled
ii. Monitor every system component, including, but not limited to:
    a. Active equipment – MN, RN, RRH, UPS
    b. Passive components – fiber optic strands, coaxial cable lines, antennas
iii. Capable of monitoring the temperature of the active equipment

8. WPN Technical Requirements

The proposed WPN system must comply with the following technical requirements:

8.1 Network Environment

The WPN must possess the following characteristics:

i. Wireless interface based on IEEE's 802.11b/g standard, upgradeable to 802.11n

ii. Network segments:

    The WPN shall provide for segmentation in order to create the following network segments, each operating independent from the other:

    - CCDA administration
    - Property administration
    - ISP – public service

    Each network segment shall be a client of the selected ISP.

iii. Support the following network applications:

    b. Internet access
    c. Email
    d. Client/server applications
    e. Voice over Wi-Fi

iv. Access Points (APs) shall be controlled from a centralized location by a controller as defined further in this document

v. Support Quality of Service (QoS) in compliance with IEEE's 802.11e standard

vi. Support mobility via Layer-2 roaming in compliance with IEEE's 802.11i standard

vii. Capability of supporting a minimum of 8 SSIDs and multiple VLANs

viii. Capability of supporting the following Wi-Fi-enabled client types:

   a. PCs
   b. PDAs
   c. Point-of-sales (POS) handheld devices
   d. Wi-Fi phones

8.2 Service Areas

The service coverage of the WPN must extend to the entirety of the property.

8.3 Active Devices

The selection of the active components for the WPN shall be done in conjunction with the CCDA in order to maintain uniformity with any existing platform or technology or vendor.

8.3.1 Access Points

The APs shall be powered via Power-over-Ethernet (PoE) in compliance with IEEE's 802.3af. The AP shall have an integrated antenna and a port to connect an external antenna should it be required.

8.3.2 Controller

The controlling unit shall be able to manage and control the APs from a centralized location. It shall be rack-mountable.

8.3.3 PoE Source

The PoE unit shall be rack-mountable. The PoE shall comply with IEEE's 802.3af standard.

8.4 Passive Components

The selection of the passive components for the WPN shall be done in conjunction with the CCDA in order to maintain uniformity with any existing platform or technology or vendor.

The components utilized as part of the communications distribution system (structured cabling) for the WPN shall comply with the following:

8.4.1 Copper Media and Connectivity

i. System Category – The complete structured cabling system shall be a minimum of Cat6.
ii. Cable Termination – All horizontal cable drops shall be terminated in a patch panel at each telecommunications room (TR) and/or telecommunications cabinet (TC), and in a telecommunications outlet at each AP location utilizing a surface-mounted box.

iii. Horizontal cable – Cable utilized in all areas shall be UTP CMP.
iv. Patch-cords – All patch-cords shall be factory assembled.

Note: No field-terminated patch-cords or "home-runs" will be accepted.

8.4.2 Cable Pathways

Cables shall be supported throughout each route in its entirety. Acceptable cable support types are:

- Plenums – J-hooks, cable trays, cable ladders
- Exposed areas – EMT conduit
- TRs – cable trays, EMT conduit

Existing cable ladders can be utilized where available.

8.4.3 Grounding and Bonding

Components such as cable-trays, conduits, APs, patch panels, active rack-mounted equipment and racks must be properly grounded in accordance with the National Electrical Code (NEC) 2008, ANSI-J-STD-607-A-2002, and Chapter 8 (Grounding, Bonding and Protection of BICSI's TDMM (11th Edition).

8.4.4 Administration

8.4.4.1 Network Administration

The WPN Operator shall be the main administrator of the system; however, the ISP shall have administrator privileges in order to provide service to its clients as described in section 8.1. The contractual agreement between the WPN Operator and the ISP shall contemplate this privilege.

8.4.4.2 Infrastructure Identification

Components such as APs, patch panels, telecommunications outlets, horizontal cable drops and active components shall be labeled in accordance with TIA/EIA-606 or the WTS Operator's internal identification scheme.

8.5 Required Documentation

The following documentation shall be included as part of the proposal package:

- Document providing all the details pertaining to the proposed solution
- System diagrams illustrating the proposed components
- Specifications datasheets for all active and passive components
- Document providing all the details pertaining to the migration path of the proposed solution from 802.11b/g to 802.11n and listing the required software, hardware and configuration upgrades.
- Certification letter from the active equipment manufacturer assuring that the proposing party counts with the manufacturer's support, applicable training and certifications.
- Copy of the proposing company's valid training certification with issuing date

9. System Design

Once the project has been awarded, the WTS Operator must prepare a detailed design of the system for the revision and approval of the CCDA. The following requirements are mandatory to be taken into account as part of such design:

9.1 The design of the structured cabling of the WTS must be performed in compliance with applicable codes and standards. These include:

- Code – NEC 2008
- Standard – TIA/EIA-568-B.1 & B.2
- Standard – EIA-569-B
- Standard – J-STD-607-A

The design must be certified by a RCDD in good standing with BICSI.

9.2 The design of the wireless coverage of the WTS must be certified by a PE, WFRE and/or a RCDD/WD

9.3 The design package to be submitted by the WTS Operator must include, but not be limited to:

- Technical specifications of all of the components to be included as part of the WTS
- Schematic drawings

  - General Specifications – certified by a RCDD
  - Designations – certified by a RCDD
  - Pathways and spaces – certified by a RCDD
  - Riser and single line diagrams – certified by a RCDD
  - Estimated coverage for the NH-DAS – certified by a WFRE or a RCDD/WD
  - Estimated coverage for the WPN – certified by a WFRE or a RCDD/WD

9.4 The coverage design for the NH-DAS must be done for service in both the 850MHz and 1900MHz frequency bands. The system must be design for an RSSi of -75dB ± 5dB or better in 90% of the property including service areas.

9.5 The coverage design for the WPN must be done for service in the 2.4GHz frequency band. The system must be design for an RSSi of -67dB ± 5dB or better in 90% of the property including service areas.

9.6 The link budget for the WPN shall be developed taking into consideration that the power levels for CCK and OFDM modulations will be set to equal values at every AP.

9.7 For the WPN, dense service areas shall have a dedicated AP. APs assigned to these areas shall have their power output set to avoid excessive propagation in other areas.

9.8 The WPN's coverage shall be designed for a minimum SNR of 25dB in 90% of the areas.

9.9 For both systems, design for 10-20% overlap in AL coverage boundaries

10. Implementation Requirements

The WTS Operator must implement the system in compliance with the following requirements, with no additional cost to CCDA:

10.1 The WTS Operator must assign a Project Manager to the project that will act as the main point of contact for all the parties involved in the project.

10.2 A detailed project plan and proposed schedule must be prepared and submitted to the CCDA for its revision and approval. Plan proposed will comply with TPMA/PMI methodology.

10.3 The system construction must be performed in accordance to the approved system design.

10.4 The structured cabling for the NH-DAS and WPN must share the pathways whenever possible.

10.5 The installation of all the components of the system must be performed in compliance with the manufacturers' recommendations. Once the installation has been performed, a manufacturer's representative must inspect the project and certify it.

10.6 Once the system has been properly installed, as-built plans of the system must be prepared and a copy of these must be submitted to the CCDA.

Exhibit B

EVALUATION CRITERIA

RFP # 174

TELECOMMUNICATIONS WIRELESS SOLUTIONS

Criteria*
Interested Party's Profile and Resources
Project Experience
Commercial Relations with Cellular/PCS Service Providers
Interested Party's Financial Condition
Additional Offerings / Information

The AUTHORITY may consider additional evaluation criteria not listed on this table.

Exhibit C

PROCUREMENT SCHEDULE

Milestone	Dates*
Public Announcement	August 12, 2008
Documents Available	August 12, 2008
General Information Session	August 21, 2008
Last date for Interested Parties to submit questions to the AUTHORITY regarding RFP.	August 28, 2008
Last date for AUTHORITY to issue addenda to RFP	September 4, 2008
Proposal Submission Date	September 11, 2008

The AUTHORITY reserves the right to amend or revise this Schedule.

Exhibit D

PROJECT EXPERIENCE

Facility Information	
Name	
Physical Address	

Property Landlord Information	
Company Name	
Agreement Commencement Date	
Contact Person	
Title	
Telephone	
E-mail	

Service Provider Information*	
Company Name	
Frequency Band(s) Utilized	
Technologies Implemented	
Operations Start Date on Facility	
Contact Person	
Title	
Telephone	
E-mail	

* The service provider information shall be replicated for every service provider operating in the facility.

Exhibit E

APPLICATION FOR BIDDERS REGISTRY AND RELATED DOCUMENTS

Documents included:

1. Declaración Jurada – Registro Único de Licitadores
2. Requisitos para Ingresar al Registro Único de Licitadores
3. Solicitud para Ingreso al Registro Único de Licitadores